CABLE DOCK

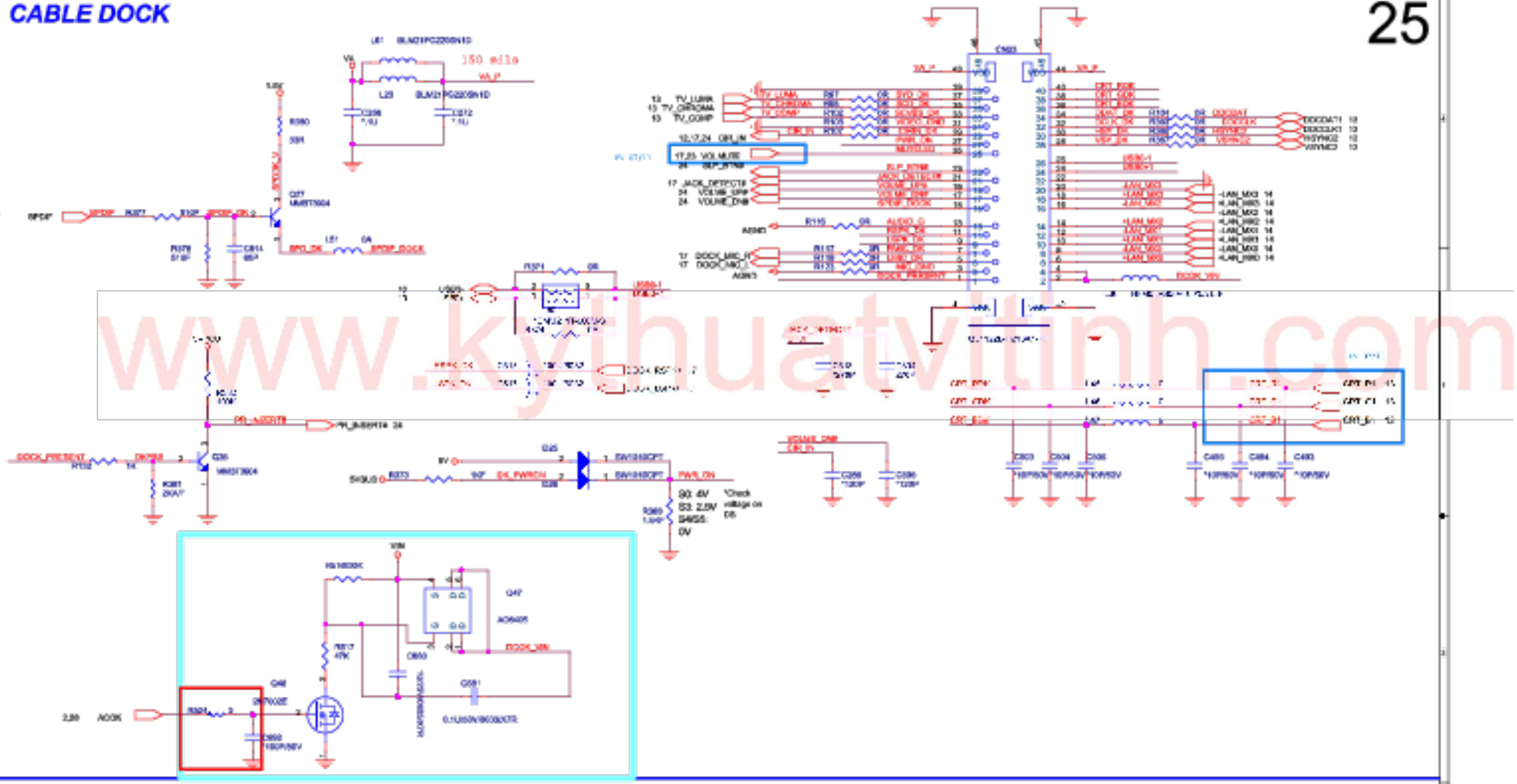

FAN

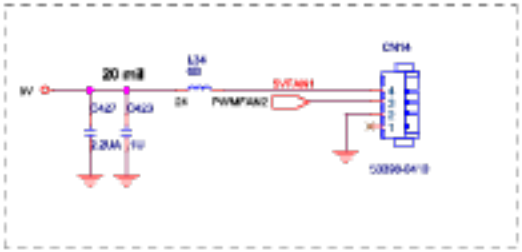

FAN1 PWM CONNECTOR

www.kythuatvitinh.com

PROJECT : TT8
Quanta Computer Inc.

Document Number: CABLE DOCKING