7. Schematic Diagram

7-1 Circuit Description

7-1-1 Overall Block Description

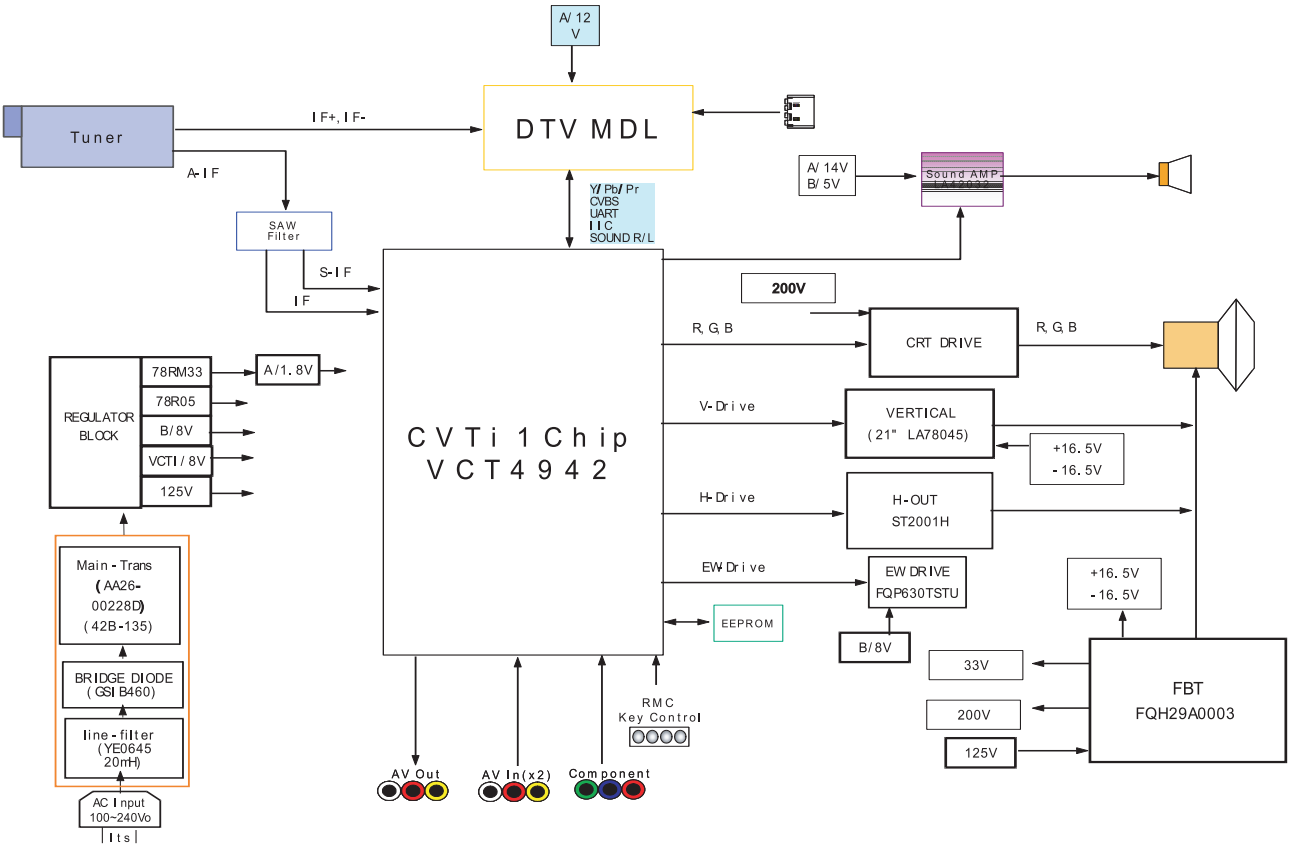

Part	Function
VCTi 1Chip	Treat IF+MICOM+VIDEO+MSP+Switching function.
DTV Module	Treat Channel, MPEG Decoder, AC-3 Decoder, CPU, Scaler, Video DAC, Audio function related to DTV signal.
VIDEO	Output video signal , input by Main Tuner and external equipment through VCTi Chip, as the final CRT R/G/B
SOUND	Output as Speaker through Audio Processing block and Sound AMP inside VCTi

7-1-2 Power Signal

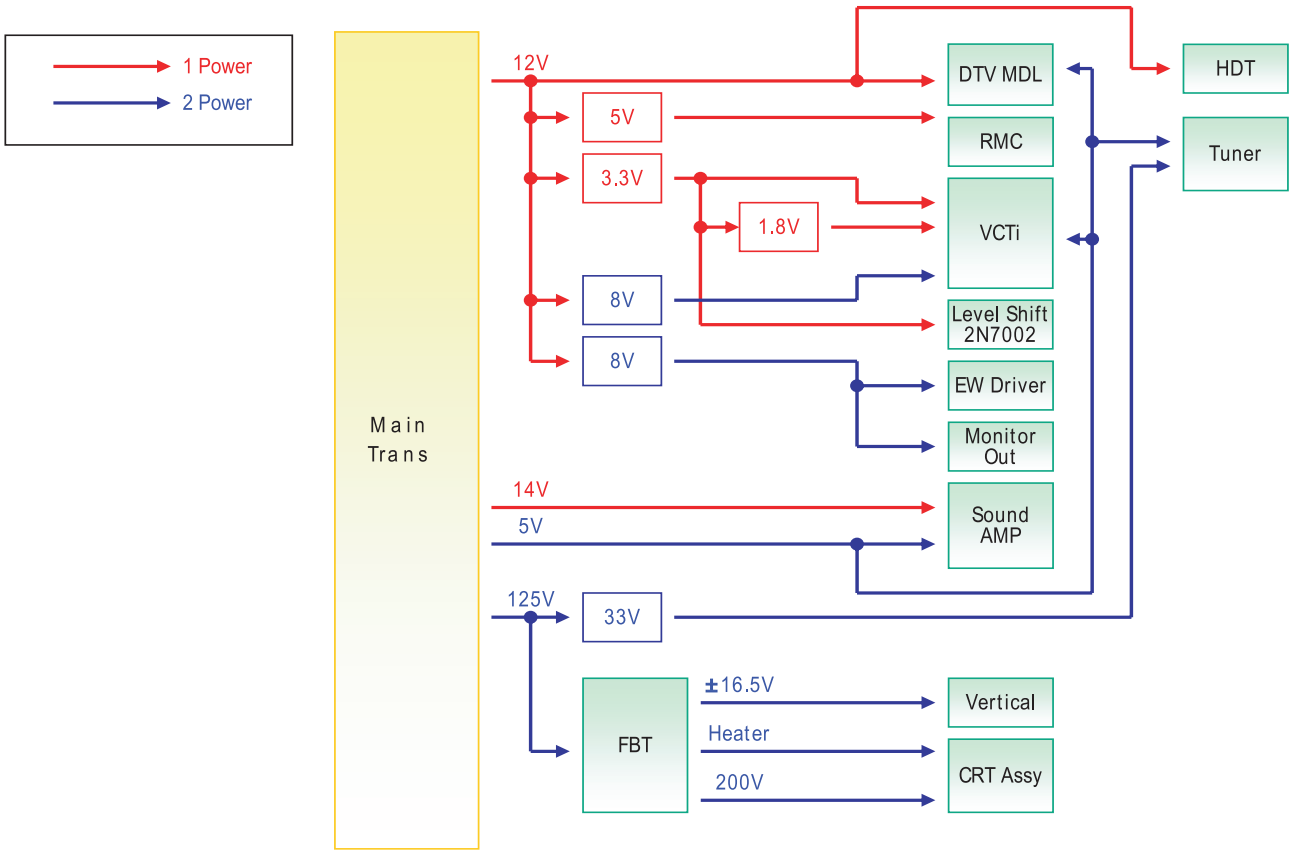

7-1-3 Partial Block Diagram

1. Main Block Description

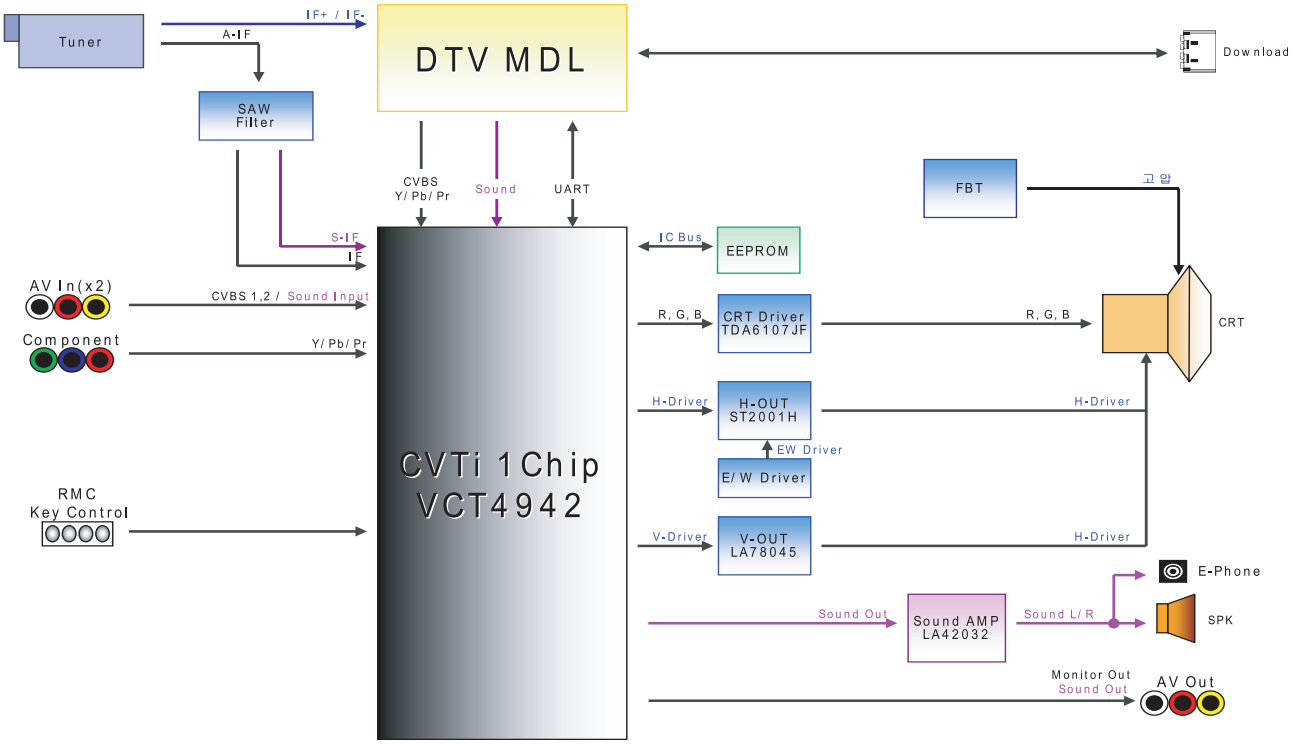

2. DTV MDL Block Description

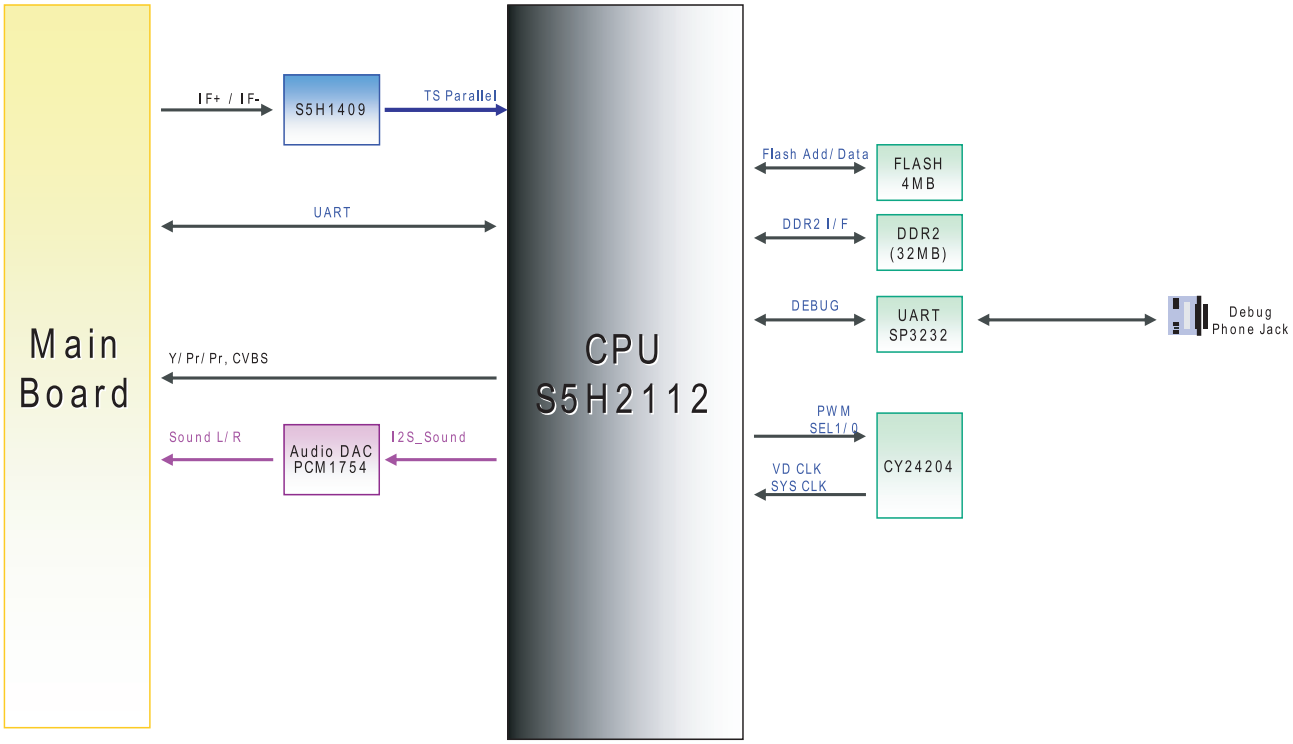

MEMO

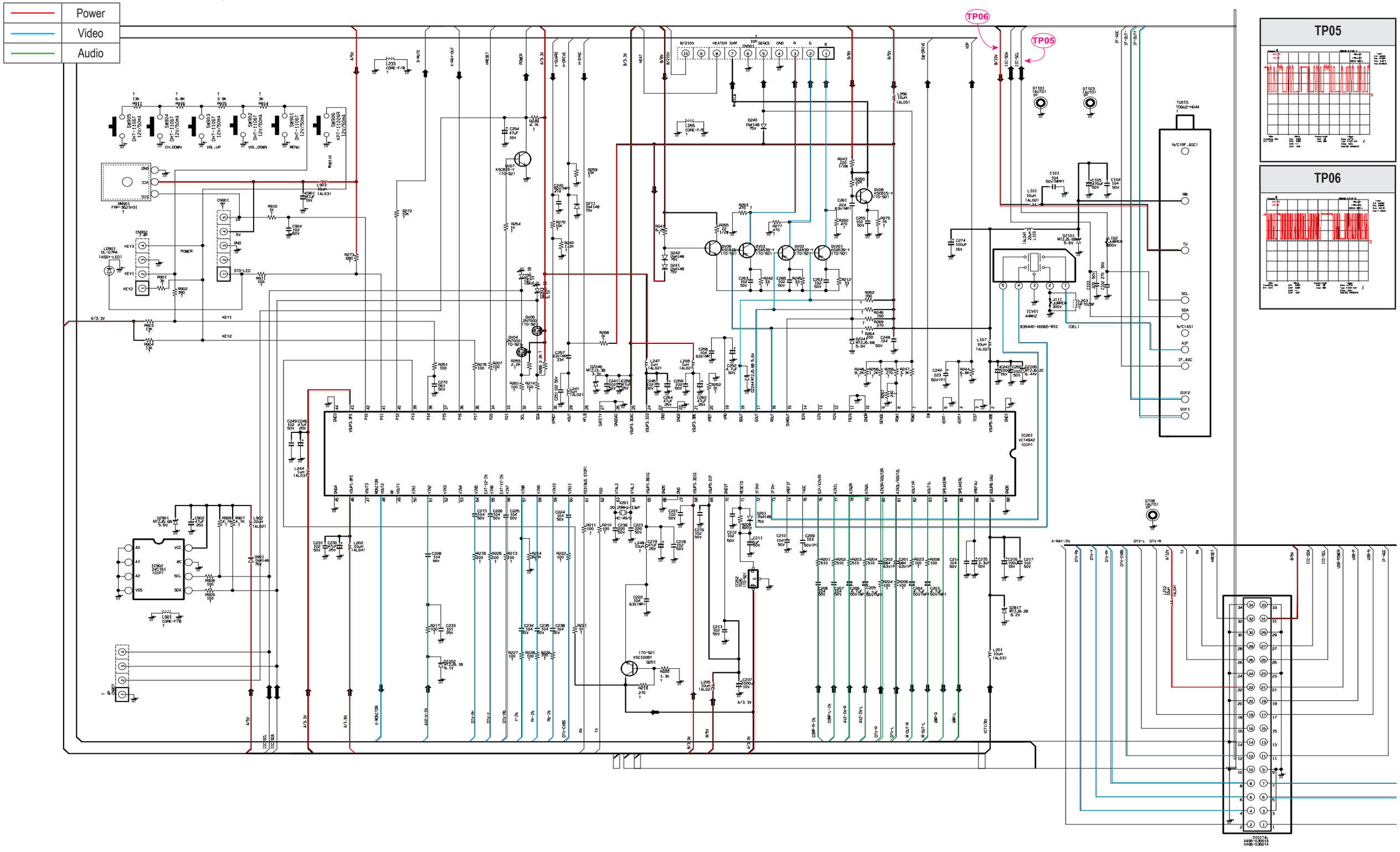
Power
Video
Audio
TP06
TP05
TP05
TP06

	Video
	Audio

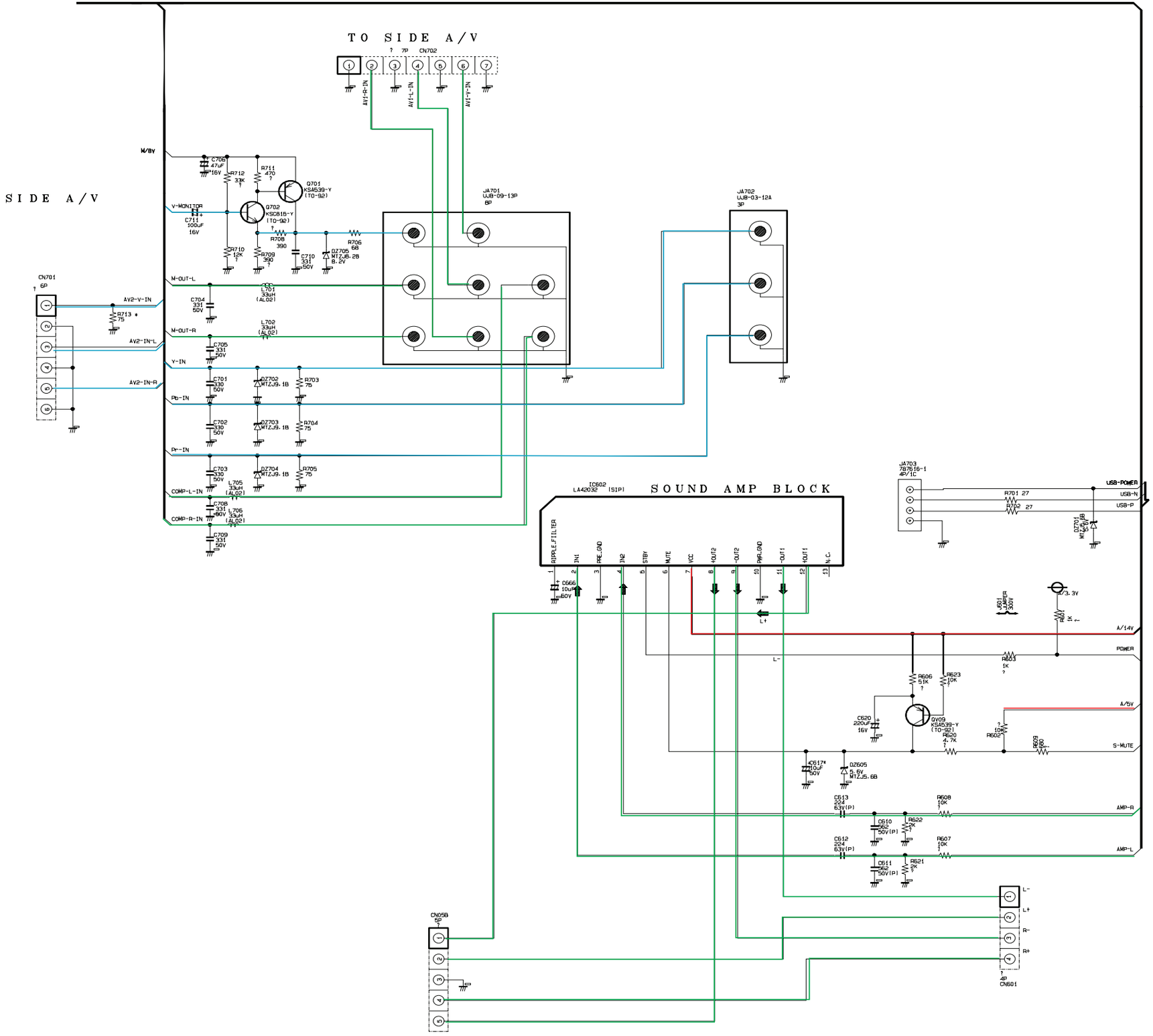

TO SIDE A/V
SIDE A/V
SOUND AMP BLOCK
CN702
CN701
CN601
CN05B
JA701
JA702
JA703
IC602
LA42032 (SIP)
M/8V
V-MONITOR
M-OUT-L
M-OUT-R
Y-IN
Pb-IN
Pr-IN
COMP-L-IN
COMP-R-IN
AV2-V-IN
AV2-IN-L
AV2-IN-R
USB-POWER
USB-N
USB-P
A/14V
POWER
A/5V
S-MUTE
AMP-R
AMP-L

Video	
Audio	

TP01

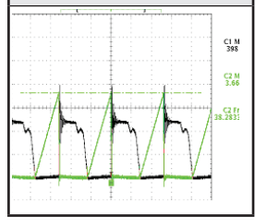

TP02

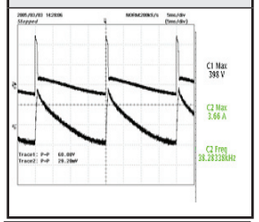

TP03

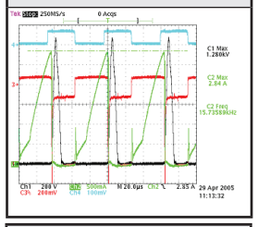

TP07

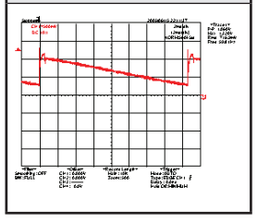

TP08

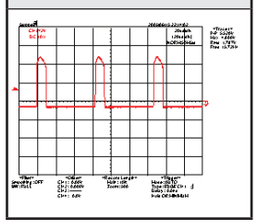

TP01

TP02

TP03

TP07

TP08

STR-W6750F CHANGE

POWER-TRANS

HOT

COLD

PHOTO-COUPLER

DEGAUSSING

VERTICAL AMP

T401 80mH/520uH HDT

FBT

Q404 FQP630TSTU (ASSY-H/S)

	Video
	Audio

CRT (MAIN SUB CRT)

V9995
PCS629-03A
8P+SEN

L502*
HF70ZBF

C508
470
3KV

R501H
1K-K
1/2W(RC)

R502H
1K-K
1/2W(RC)

CR511
1K-K
1/2W(RC)

C506
10uF
250V

R520
*
10M
1/2W

C507
10uF
250V

D504
RGP10J
600V

R519
56K
1/2W

R521*
2W(AF)
1.5(AF)

J504*
TCWA
300V

* R530
75(AF)
1/2W(AF)

C514
471
50V

C513
471
50V

C512
471
50V

Q504
KSA539-Y
(TO-92)

Q505
KSA539-Y
(TO-92)

Q506
KSA539-Y
(TO-92)

R513
12K(AF)
2W(RS)

R514
12K(AF)
2W(RS)

R515
12K(AF)
2W(RS)

R516
36K?

R517 36K ?

R518 36K ?

L503A
2.2uH

Q501
KSC2330-Y
(TO-92L)

Q502
KSC2330-Y
(TO-92L)

Q503
KSC2330-Y
(TO-92L)

R510
220
?

R511
220
?

R512
220
?

C504
821
50V

C505
821
50V

C511
821
50V

R507
47
?

R508
47
?

R509
47
?

R504
1.5K
?

R505
1.5K
?

R506
1.5K
?

R501
47
?

R502
47
?

R503
47
?

CN501
10P
?

B
G
R
GND
SE
NC
HEATER
NC

IC
G1(GND)
GK
G2(SCREEN)
RK
HEATER(-)
HEATER(+)
BK
IC

From FBT
H.V Output
F.V Output

G3(FOCUS)
G1(GND)
(FBT H.V)

RK
GK
BK
HEATER(-)
HEATER(+)
G2(SCREEN)

CRT
A51KQJ63X02(H)

GND

*GT501
1P

*GT502
1P

*GT503
1P

*GT504
1P

From FBT
S.V Output

S9501
S-23
1.5KV

S9502
S-23
1.5KV

S9503
S-23
1.5KV

S9504
S-23
1.5KV

GND_C

	Video
	Audio

JA02
JUMPER
300V

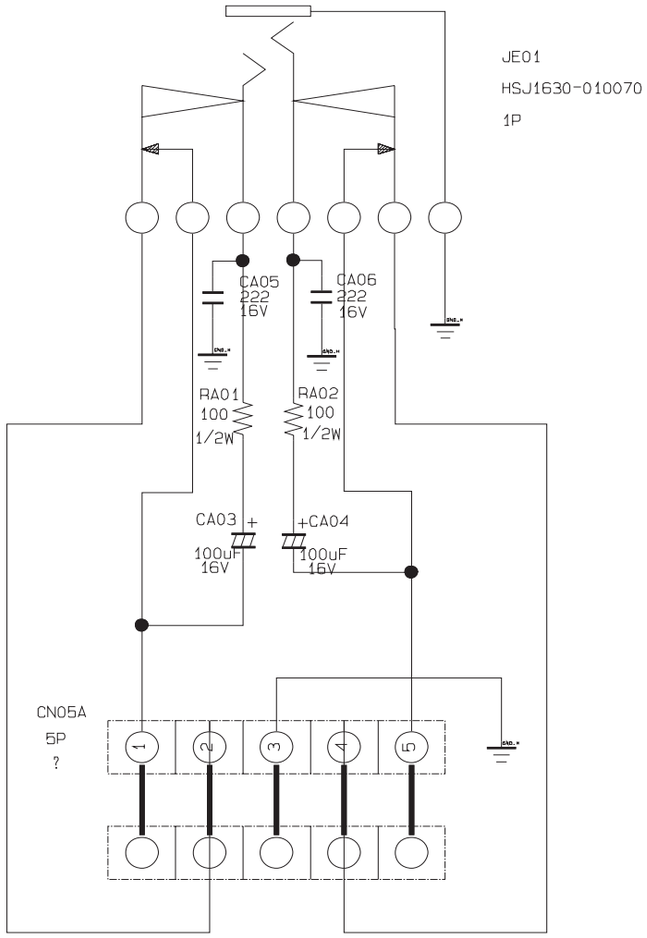
JE01
HSJ1630-010070
1P
CA05
222
16V
CA06
222
16V
RA01
100
1/2W
RA02
100
1/2W
CA03
100uF
16V
CA04
100uF
16V
CN05A
5P
?

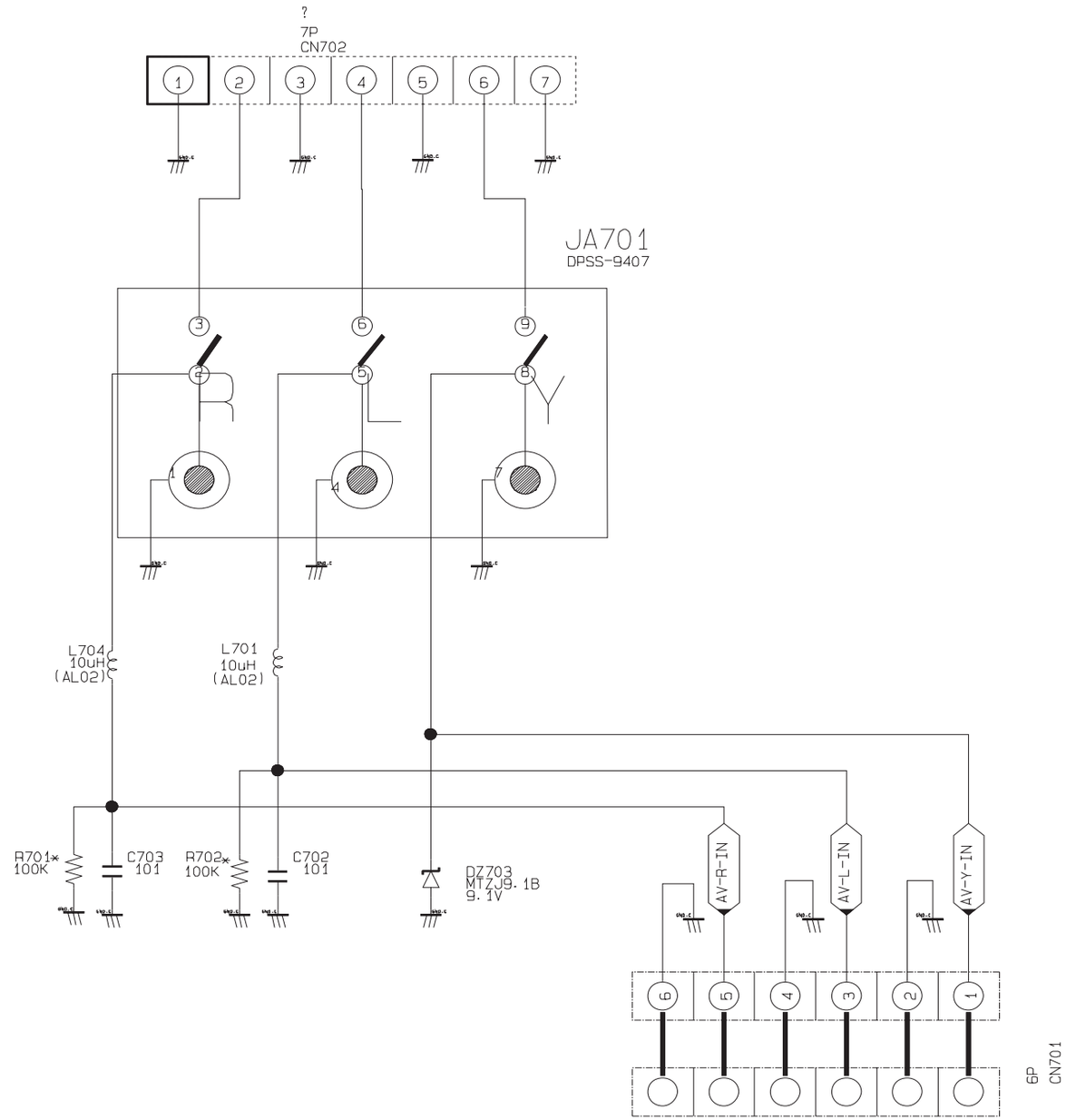
?
7P
CN702
JA701
DPSS-9407
L704
10uH
(AL02)
L701
10uH
(AL02)
R701*
100K
C703
101
R702*
100K
C702
101
DZ703
MTZJ9.1B
9.1V
AV-R-IN
AV-L-IN
AV-Y-IN
6P
CN701