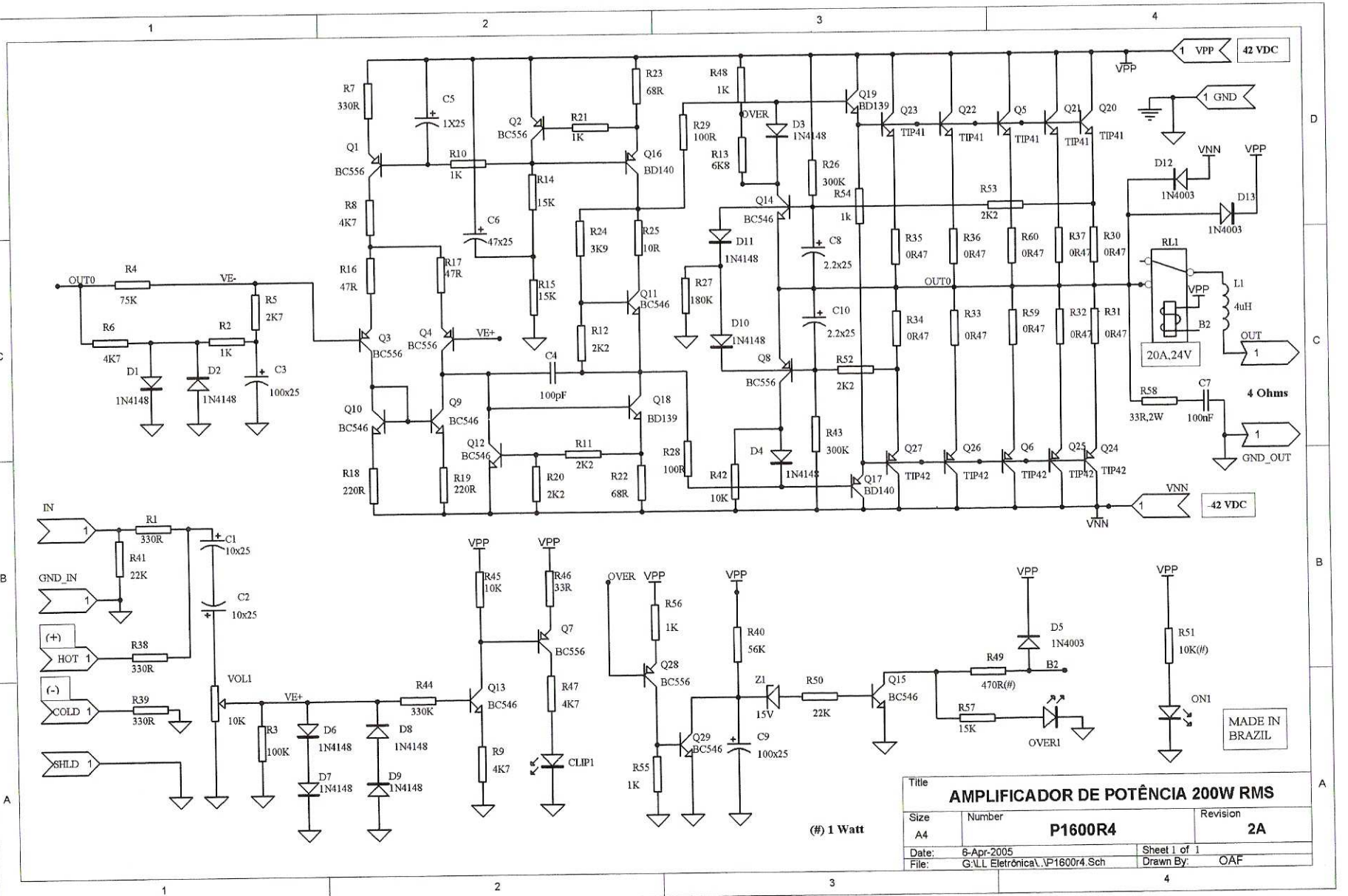
VPP
42 VDC
GND
VNN
-42 VDC
OUT0
OUT
GND_OUT
4 Ohms
20A,24V
RL1
L1
4uH
IN
GND_IN
(+)
HOT
(-)
COLD
SHLD
VOL1
VE-
VE+
OVER
OVER1
CLIP1
ON1
MADE IN BRAZIL
(#) 1 Watt
Title
AMPLIFICADOR DE POTÊNCIA 200W RMS
Size
A4
Number
P1600R4
Revision
2A
Date: 6-Apr-2005
Sheet 1 of 1
File: G:\LL Eletrônica\..\P1600r4.Sch
Drawn By: OAF