SSID = PWR.Plane.Regulator_3p3v5v

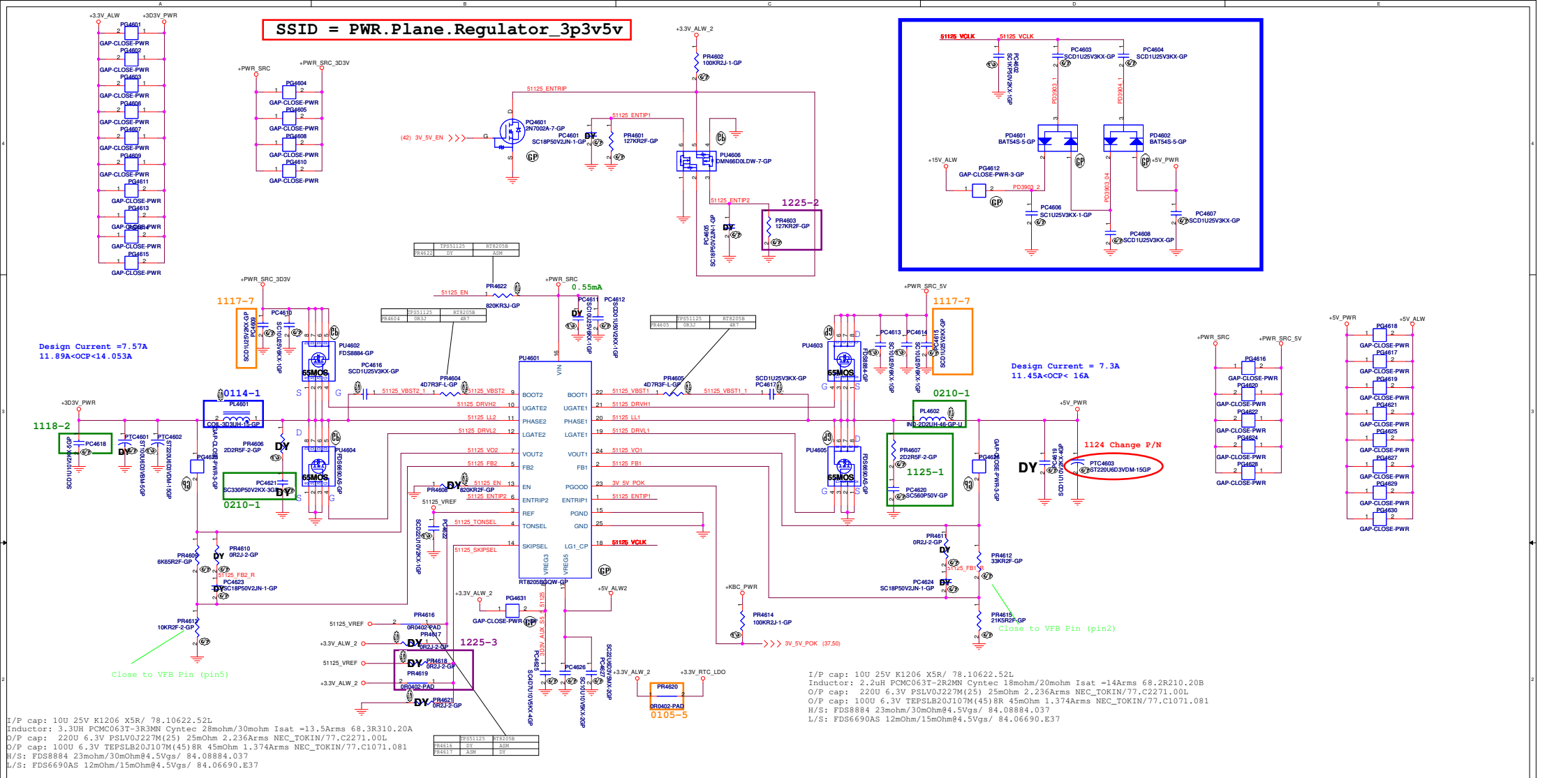

I/P cap: 10U 25V K1206 X5R/ 78.10622.52L
Inductor: 3.3UH PCMC063T-3R3MN Cyntec 28mohm/30mohm Isat =13.5Arms 68.3R310.20A
O/P cap: 220U 6.3V PSLV0J227M(25) 25mOhm 2.236Arms NEC_TOKIN/77.C2271.00L
O/P cap: 100U 6.3V TEPSLB20J107M(45)8R 45mOhm 1.374Arms NEC_TOKIN/77.C1071.081
H/S: FDS8884 23mohm/30mOhm@4.5Vgs/ 84.08884.037
L/S: FDS6690AS 12mOhm/15mOhm@4.5Vgs/ 84.06690.E37

I/P cap: 10U 25V K1206 X5R/ 78.10622.52L
Inductor: 2.2uH PCMC063T-2R2MN Cyntec 18mohm/20mohm Isat =14Arms 68.2R210.20B
O/P cap: 220U 6.3V PSLV0J227M(25) 25mOhm 2.236Arms NEC_TOKIN/77.C2271.00L
O/P cap: 100U 6.3V TEPSLB20J107M(45)8R 45mOhm 1.374Arms NEC_TOKIN/77.C1071.081
H/S: FDS8884 23mohm/30mOhm@4.5Vgs/ 84.08884.037
L/S: FDS6690AS 12mOhm/15mOhm@4.5Vgs/ 84.06690.E37

TPS51125:

TONSEL	CH1	CH2
GND	200kHz	265kHz
VREF	245kHz	305kHz
VREG3	300kHz	375kHz
VREG5	365kHz	460kHz

SKIPSEL	VREG3 or VREG5	VREF(2V)	GND
Operating Mode	OOA Auto Skip	Auto Skip	PWM only

EN0	Open	820kΩ to GND	GND
Operating Mode	enable both LDOs, VCLK on and ready to turn on switcher channels	enable both LDOs, VCLK off and ready to turn on switcher channels	disable all circuit

RT8205B(74.08208.A73):

TONSEL	CH1	CH2
GND	200kHz	250kHz
VREF	300kHz	375kHz
VREG3	365kHz	460kHz
VREG5	365kHz	460kHz

TPS51125	74.51125.073
RT8208BGQW	74.08208.A73

<Core Design>

Wistron Corporation
21F, 88, Sec.1, Hsin Tai Wu Rd., Hsichih, Taipei Hsien 221, Taiwan, R.O.C.

Title: RT8205B_5V/3D3V

Size: A2 | Document Number: Berry AMD Discrete/UMA | Rev: A00

Date: Thursday, March 04, 2010 | Sheet 46 of 95